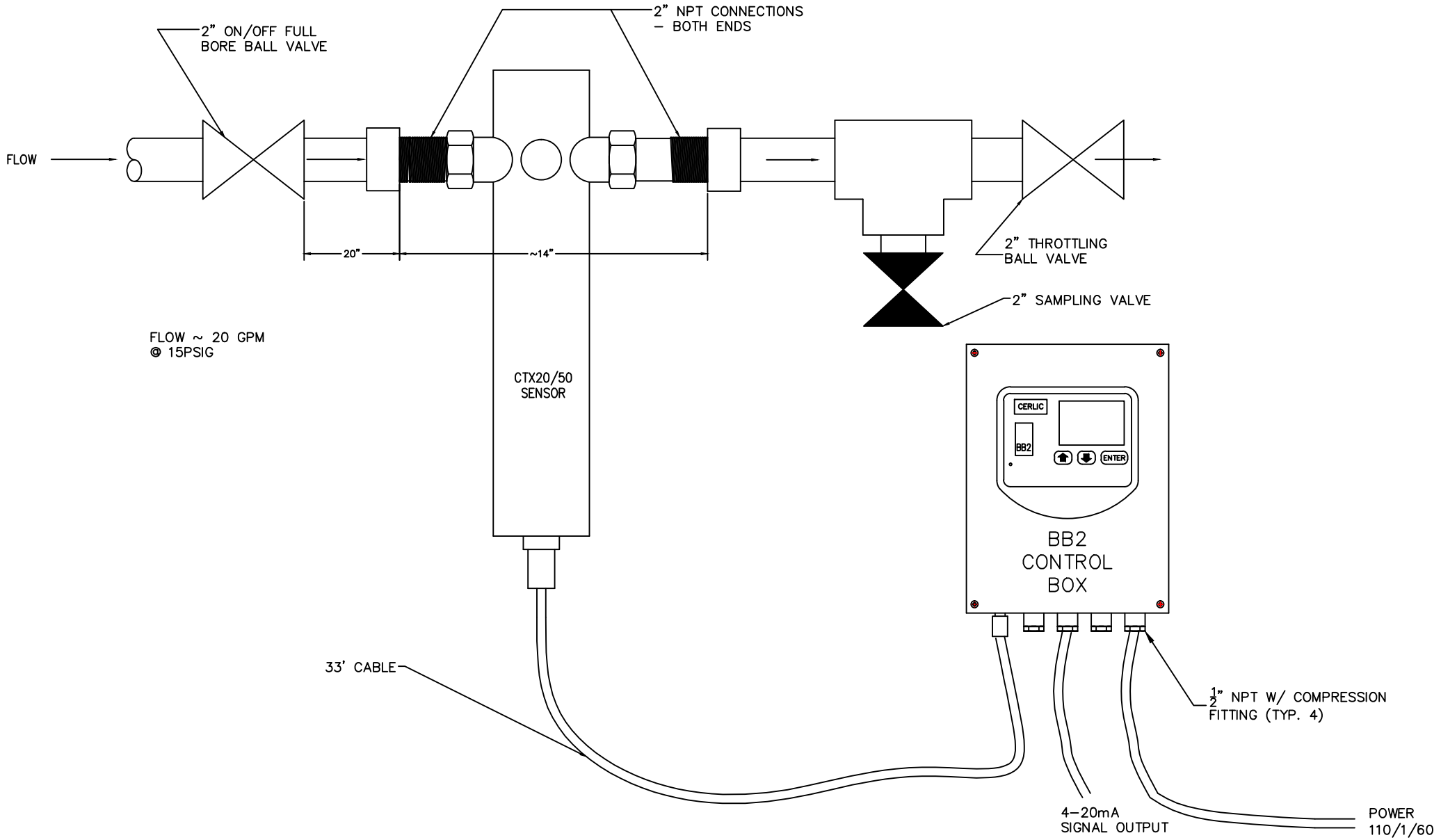

Cerlic Environmental Controls, Inc
P.O. Box 420097
Atlanta, GA 30342
Phone (404) 256–3097
Fax (404) 256–3094

TYPICAL PIPING FOR CTX20/25

DRAWING NUMBER	LAST REV. DATE	SCALE
113	01/01/14	1/4

TLJ DRAWN BY 06/04/02
JR CHECKED BY
APPROVED BY

NO.	DESCRIPTION	INT.	DATE
1			
2			
3			
4			
5			
6			
7			

REVISIONS